Operation Manual

Super-High Power SPDT (*SPCO/SPTT*) Switching Apparatus

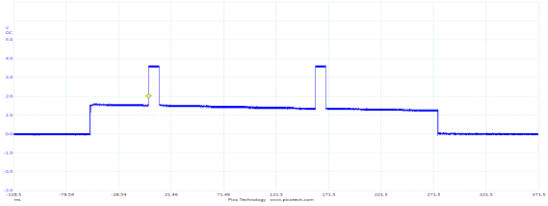

Scale 1:100, Vsurg =380V; Load = 1.0 Ohm, Is = 340A, Pulses=10ms, Vbase = 180V, Ibase = 180A

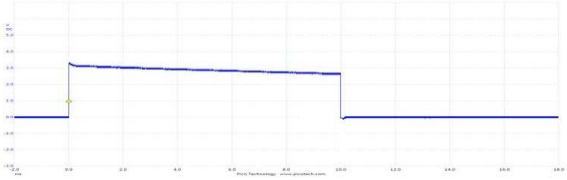

Scale 1:100, V=400V; Load = .5 Ohm, I = 800A, Pulses=10ms, R. slope = 2.5us, F. slope = 2.7us

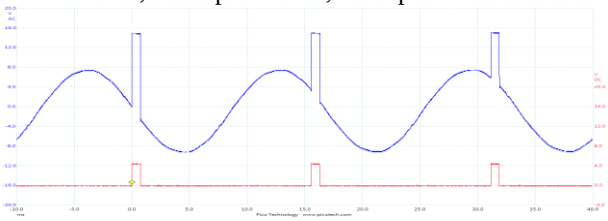

Generated signal for testing power-surge protectors

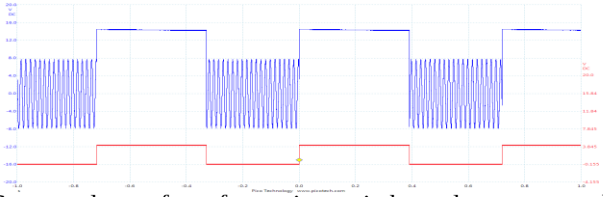

Generated waveform for testing switch-mode power supplies

SHPSA-103A650/08F

P/N EDR89002

VS Holding LLC – http://www.vsholding.com

Manufactured by

Electronic Design & Research, Inc

7331 Intermodal Drive. Louisville, KY 40258, USA

EDR Inc. is a pioneer in developing and manufactures high-speed, high-power relays/switches, High-Speed H-bridge drivers, etc. Since 1998, we have produced vast varieties of Solid-State Modules and Devices. Our products installed in thousand of defense, commercial, and industrial related devices and equipments. Here is a list of fields where our devices are used.

Piezo Drivers
Video Switches
½ Bridge drivers
Q-type high-pass filters
Precision F-to-V Converters
Soft-Landing Solenoid Drivers
50Hz/60Hz Comb Notch filters
Super-high Power, fast Switches
H-bridge or Full-bridge Drivers
High-power, high-speed Switches
Universal Analog Building Module
Signal Switching Separating Network
Sockets for relays, switches and drivers
Super-High Power Switching Apparatus
Charge-Pump Wide-Band FM detectors
Low-Noise, High-Voltage DC/DC converters
DC-3phase AC resonance mode driver for EV
DC-12phase AC resonance mode driver for EV
Perpetual Pulse-width Discriminator, US Patent
½ and H Fuzzy Logic sockets for various relays
Fuzzy-Logic SPDT Relays, Switches and ½ Drivers
Fully protected, Solid-State DPST Brake, US Patent
Single Pole, Single Throw Relays and Switches, (SPST)
Power-distributing module for Motorcycles, US Patent
Single Pole, Double Throw Relays and Switches, (SPDT)
Double Pole, Single Throw Relays and Switches, (DPST)
1-Form B, SPST-NC (normally closed) Solid State Relays
Charge-and-Add, Up/Down DC/DC Converters, US patent
1-Form B and 1-Form A, DPST-NC/NO Solid State Relays
μ-Power Controller for Magnetic Latching Valves, US Patent
High Voltage, Nana-Seconds Rise/Fall time, Push-Pull Drivers
Super-low noise preamplifiers for a low and high impedance sources
μ-control, High-Power SPST-NC, normally closed relays, US Patent

We are working diligently to bring new devices to the market and to meet your requests. Above is a list of family of devices we developed and manufacturing. Most of them covered by propriety technologies and some of them are so unique that we obtained U.S. patents. We keep a small number of popular devices in stock that are ready for immediate shipping. Our production capacity exceeds 10,000 devices per months, with two production robots programmed and working at a full speed.

For your unique applications that required a different voltage, current, or speed, ordering instruction (on the last page) could be useful in the creation a new part and summarizing what you needed. Do not hesitate to email: info@vsholding.com for any additional information, delivery schedule, and prices.

Thank you,

Vladimir A. Shvartsman, Ph.D.

V_Shvartsman@vsholding.com

VS Holding LLC
Electronic Design & Research

Context

Basics of the Super-High Power Switching Apparatus (SHPSA-XX)

The SHPSA employs several SPST switches configured as a single SPDT or SPCO/SPTT/SPDT&N switch. The main difference between them is the SPCO switch has three states when a common SPDT switch has only two states. The FIG #1 shows a SPCO mechanical switch and FIG #2 diagrams of the SPDT and SPCO switches. The SPDT switch has either one pair of terminals #2 and #3 conducts or another pair of terminals #2 and #1 conducts (ON-ON). The SPCO switch has a third state, when none of pair terminals conducts (ON-OFF-ON).

FIG #1

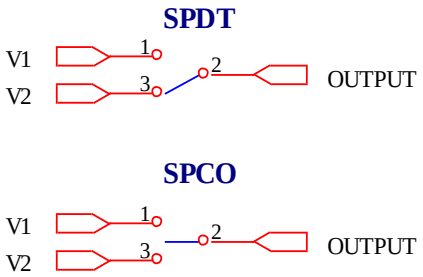

FIG #2

The SPCO configuration allows delivering energy (pulse) to a load only during a precisely defined time interval. Outside of that time limit a current does not flowing through a load. It is quit impossible achieving such condition with a SPDT switch.

All SHPSA-xx are including a Super-High Power Solid-State Switches controller (SHPSC). The SHPSC-x/x designed to control SPST switches functioning as a single independent switch or act as a SPDT (ON-OFF-ON) switch. FIG #3, #4, and #5 shows three basic SPCO configurations possible with any of available controllers.

FIG #3

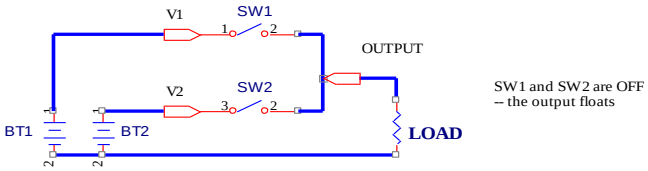

FIG #4

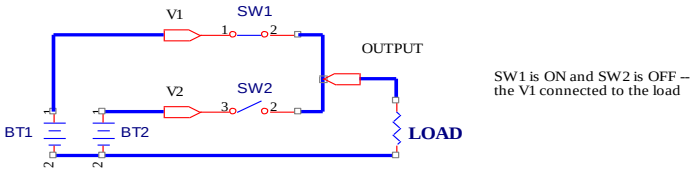

FIG #5

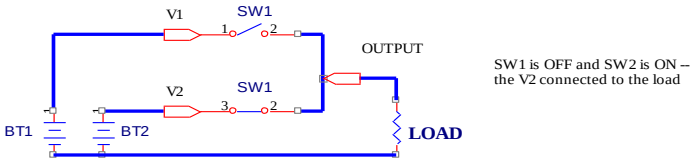

Depending on the end-applications, a customer can select one of available controllers or we can develop another model whatever requirements are. All SHPSC-x/x are simply replaceable and installable by a customer with an easy-to-fallow instruction. Having one extra as a spare or as a completely deferent model can be sometimes handy.

NOTE: We recommend until you become familiar with controls and the SHPSA limitations do not apply a maximum recommended voltage and current but practice with a low voltage (for an example 25V) and low current (for an example 5 A, 5.0 Ω load).

A pulse formatting technique

FIG #6

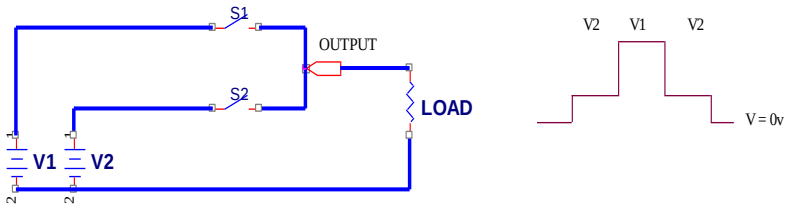

FIG #7

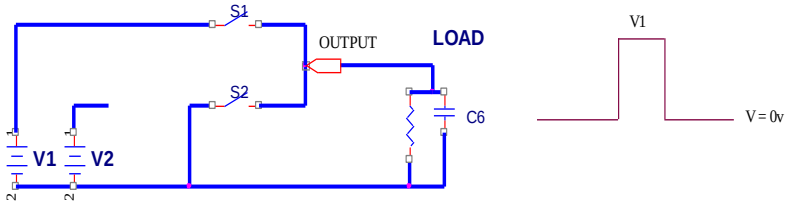

FIG #8

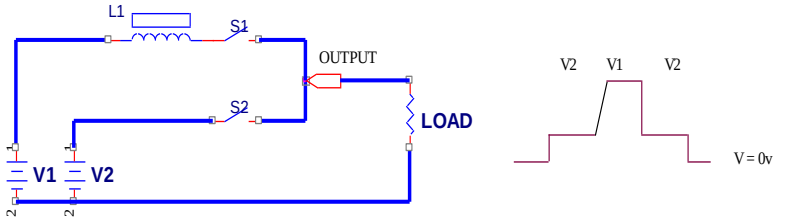

FIG #9

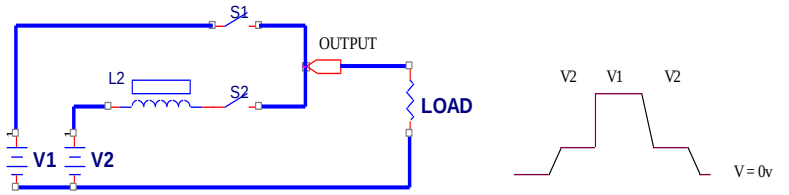

A selection of particular SPST switches for ordered SHPSA depends on a required switching speed among other specifications. Rising and falling slopes can be from a several nanoseconds to a few microseconds. As it shown on FIG #6, generated pulses on a resistive load will have a rather stable rising and falling slopes defined by SPST switches.

If a load is a combination of resistance, capacitance, and inductance, a rising/falling slopes becomes are very much depended of the load's impedance. FIG #7 shown is a better control of the falling slope's timing.

In cases, a rising slop must be not as fast an inductor L1 installed in series with the switch S1, as it shown on FIG #8, would solve that obstacle.

FIG #9 shows the way to slow a falling slope. Properties of the inductor L2 are depending on required falling time and insuring a maximum current would not saturate its core.

Maximum (calculated) forward-bias operation area (FBSOA) of MOSFET-based switches
The V-battery rated at 450V / 2,500 Amp

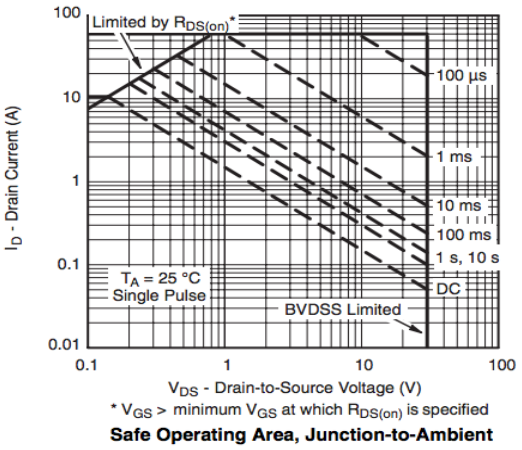

FIG #10

The FBSOA graph of a typical MOSFET

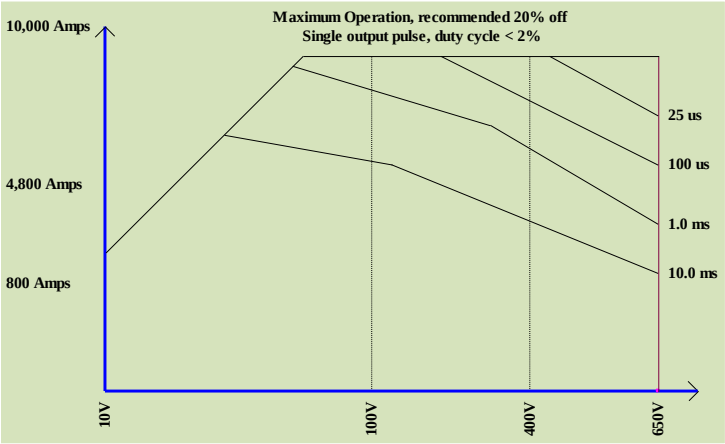

FIG #11

The FBSOA graph of the SHPSA

The FBSOA is a datasheet figure of merit that defines the maximum allowed operating points. FIG #10 shows a typical FBSOA characteristic for high-power N-Channel Power MOSFETs. It is bounded by the maximum drain-to-source voltage V_{DSS}, maximum conduction current I_{DM} and constant power dissipation lines for various pulse durations. In this figure, the set of the curves shows a DC line and four single pulse-operating lines, 10ms, 1ms, 100 us and 25 us. The top of each line truncated to limit the maximum drain current and bounded by a positive slope line defined by the $R_{ds\,(on)}$ of the device. The right hand side of each line is terminated at the rated drain-to-source voltage limit (Vdss = 650V).

FIG #11 shows typical SHPSA characteristics that resembles and follows of a typical high-power MOSFET.

A SHPSA included a capacitor bank (V-battery) that consists of 50 high discharging current metal film capacitors is the source for formatting (generating) output pulses. Each capacitor rated at 50 Amp / 450V or 2,500 Amps in total for the V-battery.

NOTE: Once the V-battery charged, it holds a large amount of power, more than 1.2 MW and capable of delivering several kilojoules in a fraction of seconds. That would ruinously destroy any conductive subject placed between terminals. Maximum precautions must observe while working with input/output power terminals. Discharging cycle must initiated by pushing the DISCHARGE button located on the control panel, at the end of work and even if the SHPSA about to left unattended on a short while. A blinking LED indicated the discharging cycle is activating. The LED stops blinking once voltage on the V-battery dropped below 8V. Never touch the terminals with bare hands that could burn them and even kill you.

SHPSC-x/x is a controller for Super-High Power Switching Apparatus

The controller is an important part of the system. Several types are available and p/n EDR89002/S on the FIG #11 is the most friendly and simple to operate. Two inputs the EXT/INT and EN/PWM with signals from external pulse generators would create many output formations of pulses. The TRIGGER input is useable for a manual or remote control of an internal 10ms-pulse generator

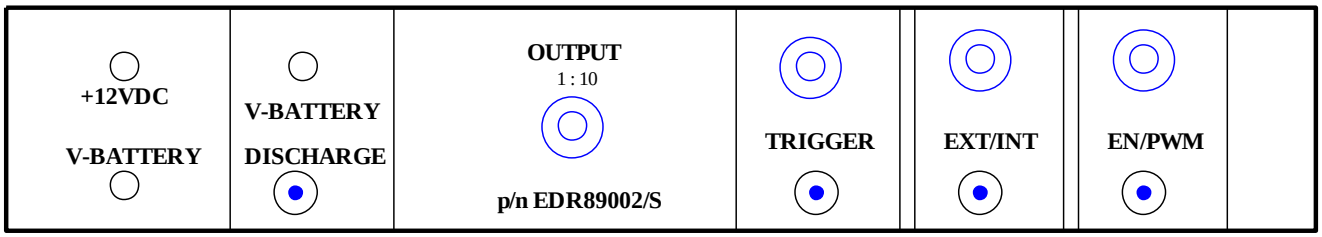

FIG #11

FIG #12

Pressing a momentarily bush-button switch or shorting the BNC connector (that can be achieve by a falling edge of pulse or a remote switch), a single 10ms pulse produced for controlling output SPST switches. On the FIG #12 shown, an output pulse of 10ms duration and of cause, its amplitude and a base line set by two external power supplies.

An example of a more advance controller

Just below on the FIG #9 is a more advance controller p/n EDR89012/3 allows creating a double-pulse output signal during defined Test Time.

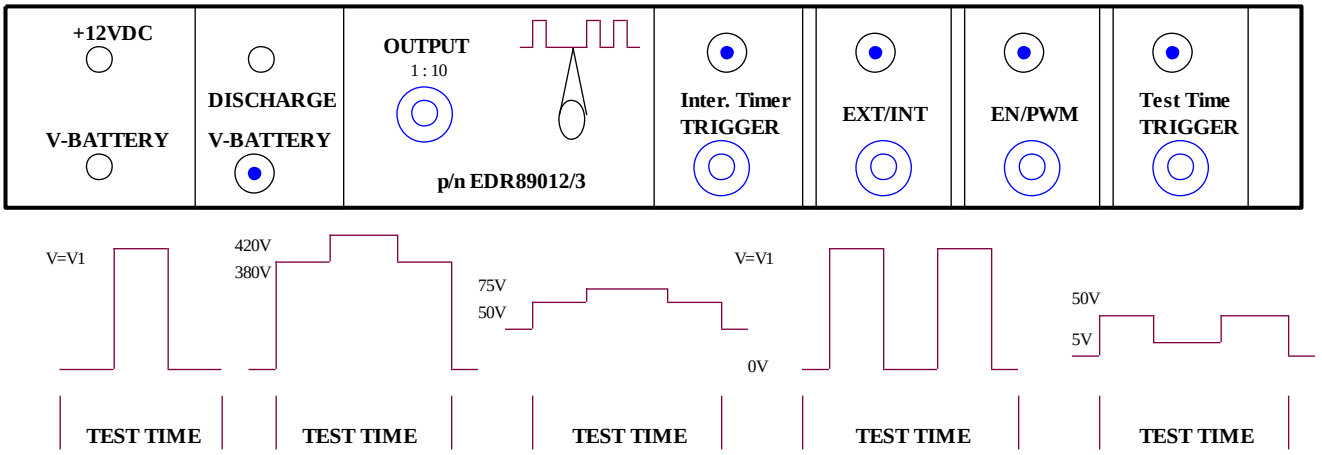

FIG #13

Typical SHPSA-XX applications with the SHPSC-1/12 (EDR89002/1/3) controller

The SHPSA-XX can be use for generating pulses having predetermined duration and rising/falling slopes. The Fig #14 shows the ways for triggering a single pulse. A momentary push-button switch on the control panel is for a manual triggering. In addition, a remotely mounted switch via a BNC connector J1, or an external pulse generator can trigger it. Moreover, a train of 10ms-pulses can be generating by applying an external pulses with duration of more than 15ms.

The FIG #15 shows three basic connections of a load. An inductor L1 or a small resistor is for de-accelerant falling slope. Maximum voltages of the pulse and the baseline set by the PS1 and PS2. The second drawing is for generating a pulse with the falling slope as fast as the rising. If the output signal required no baseline voltage (equal to 0V), than adjust the PS2 to 0V or not include it at all.

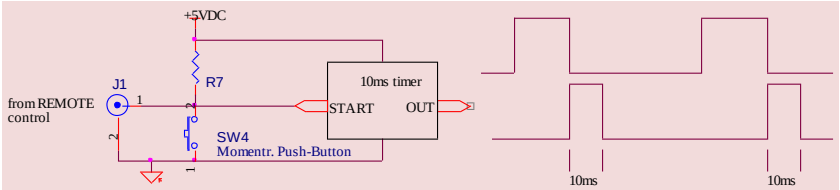

FIG #14 Triggering 10ms pulses

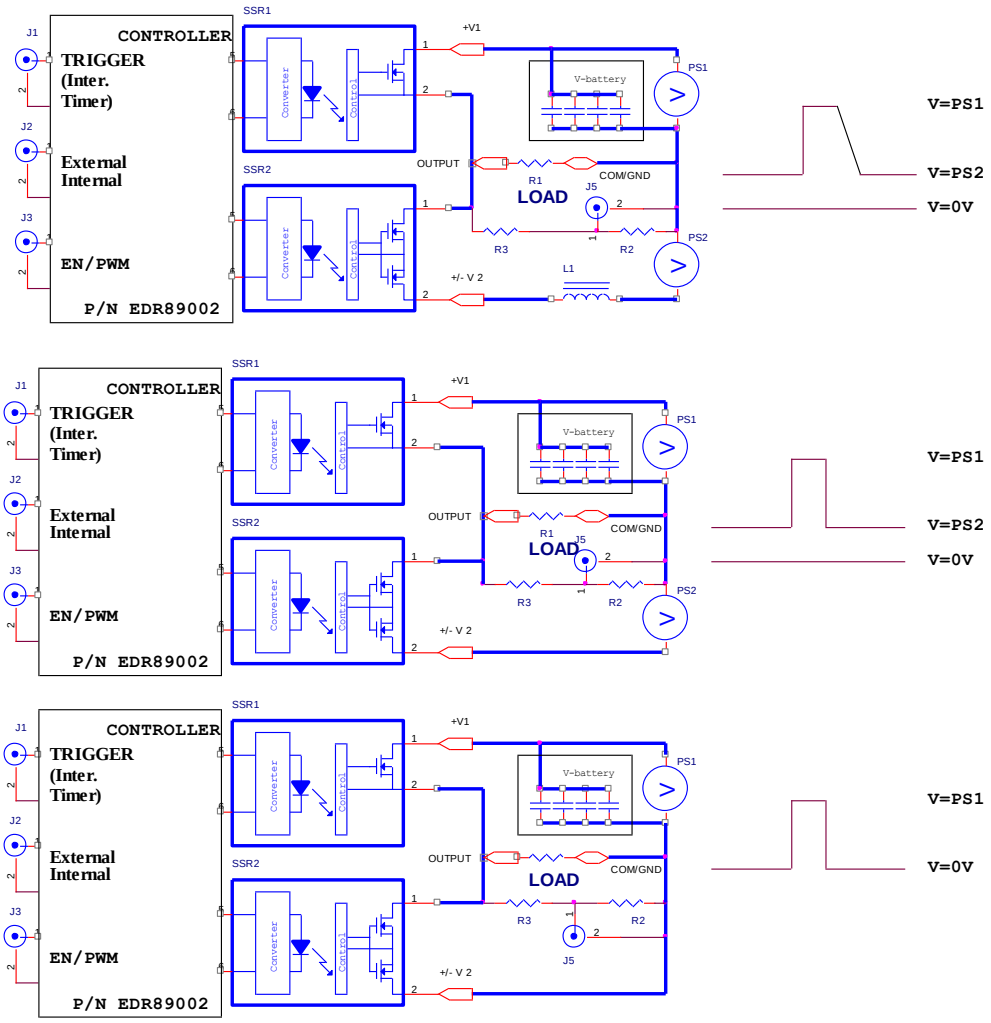

FIG #15

Applications #2, generating a more sophisticated wave

The EDR89002 allows creating a complicated waveform with assistance from external pulse generators. In cases needs for a double output pulses that is easily achievable with two external synchronized pulse generators. Here are steps for setting both generators, according to a hook-up diagram on the FIG #16.

1. Set the generator #1 to generate a single pulse of the "test timing" duration.
2. Output signal from generator #1 applies into the EN/PWM input and to the synch input of the second generator.
3. The output of the generator #2 applies into the TRIGGER input.

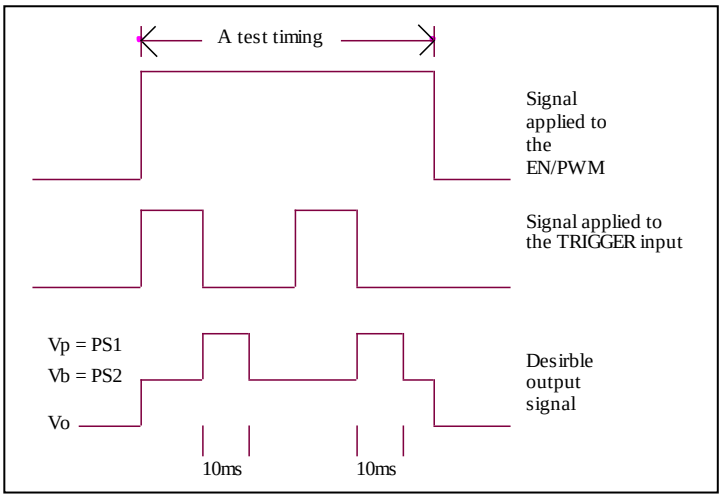

FIG #16, a sample of controlling signals for creating a dual output signal

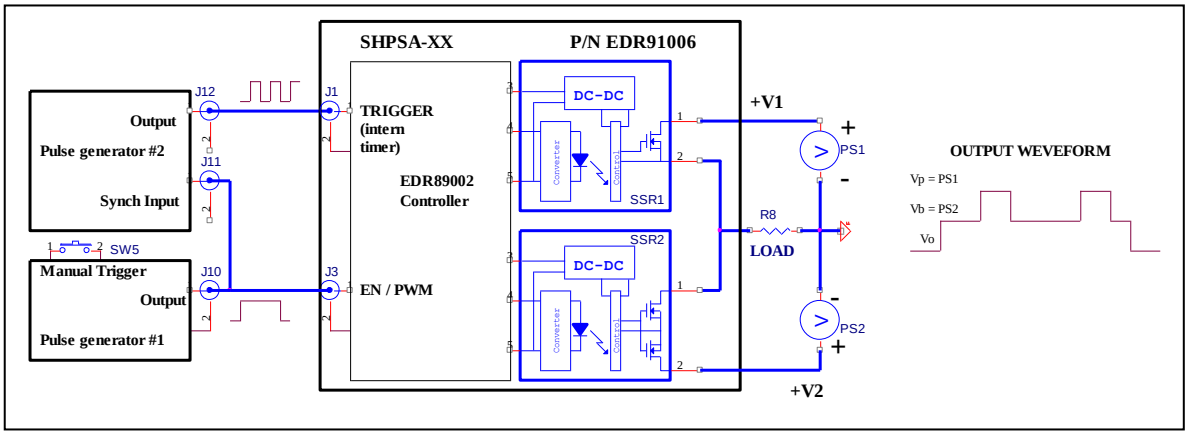

FIG #17, a hook-up diagram with two pulse generators

As was mentioned above, both power supplies, PS1 and PS2 can be set at any voltages within recommended. Only a single restriction must be observed, PS1 must be set at least 5V higher than PS1.

The PS2 can be sours of voltage of any polarities, even from a power line. That is an extremely useful for quality control of switch-mode power converters, transformers and simulation of a power (voltage) surges on AC lines.

How to generate high-speed, bi-polar signals for electrostatic painting, plasma, etching, welding, and tests of various loads

The SHPSA-xx is a cost-effective Isolated Solid State Switching Systems for endless possibilities and applications. Especially significant, it is the ability for delivering a large amount of power of any polarity onto a load almost instantly. The simplicity of interfacing to smart automatic test equipment (ATE) gives engineers the tool for designing tomorrow's equipment. The SHPSA-xx will find use in modern laboratories helping conducting experiments of a modern science, factory's floors working as a power distribution device, and quality control lab assisting in setting standards and testing final products.

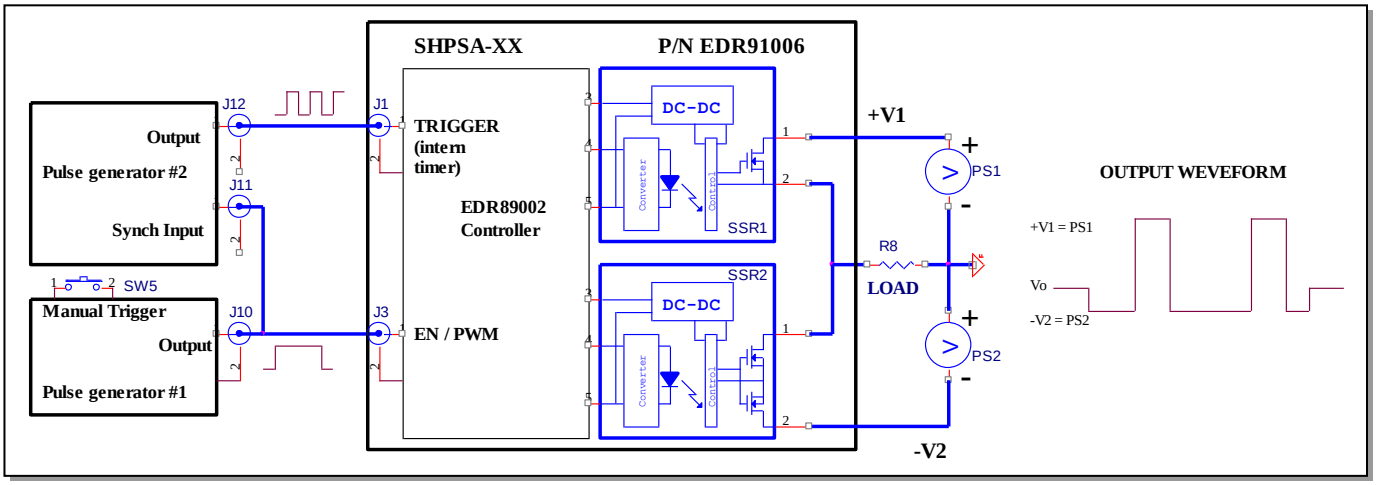

FIG #18 an example of generating a combination of pulses using the internal 10ms timer

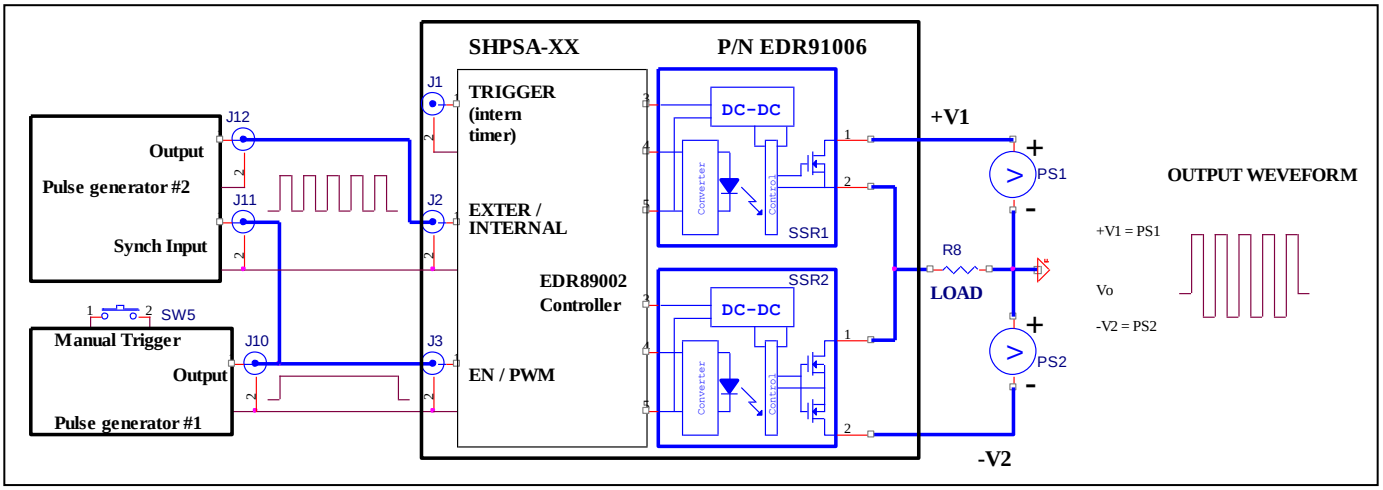

FIG #19, an example of generating arbitrary pulses of up to 200 KHz using an external generator for a predetermine period of time

If a control (SPSC-x/x) is not available that will work well for your particular application, we can develop and manufacture a controller to do whatever you might need. Please email us your inquire to info@vsholding.com

NOTES and specifics

WARNING	**SHOCK HAZARD!** High-quality capacitors installed on power supplies lines. Dangerous voltages are presented on terminals much longer after external power sources removed (disconnected). There is a discharging circuitry built-in but it takes a time for lowering voltages on power terminals to a safe level. For preventing shocks and burns, the front glass door must be locked immediately and kept closed once a task completed.

CETIFICATION

Electronic Design & Research Inc. (EDR herein) certifies that this product met its published specifications at time of shipment from the factory. EDR further certifies that its calibration measurements are traceable to the United States National Bureau of Standards, to the extent allowed by the Bureau's calibration facilities of other International Standards Organization members.

WARRANTY

This EDR hardware product warranted against defects in material and workmanship for a period of one year from the date of delivery. EDR software and firmware products designed by EDR for use with hardware product and properly installed on that hardware product warranted no to fail to execute their programming instruction due to defects in material and workmanship for a period of 360 days from the date of delivery. During the warranty EDR will, at its option, either repair or replace products that prove to be defective. EDR does not warranty that the operation of the software, firmware, or hardware shall be uninterrupted or error free.

For warranty service, with the exception of warranty options, a product must be return to a service facility designated by EDR. Customer shall prepay shipping charges by (and shall pay all duty and taxes) for products returned to EDR fro warranty service. Except for product returned to Customer from another country, EDR shall pay for return of product to Customer.

Warranty services outside the country of initial purchase are included in EDR product price, only if Customer pays EDR Inc., international prices (defined ad destination local currency price, or USA, or Geneva Export price).

If EDR is unable, within a reasonable time to repair or replace any product to condition as warranted, the Customer shall be entitled to a refund of the purchase price upon return of the product to Electronic Design & Research Inc.

LIMITATION OF WARRANTY

The foregoing warranty shall not apply to defects resulting from improper or inadequate maintenance by the Customer, Customer-supplied software or interfacing, unauthorized modification or misuse, operation outside of the environmental specifications for the product, or improper site preparation and maintenance. NO OTHER WARRANTY IS EXPRESSED OR IMPLIED. ELECTRONIC DESIGN & RESEARCH INC. SPECIFICALLY DISCLAIMS THE IMPLIED WARRANTIES OF MERCHANTABILITY AND FITNESS FOR PROCTICULAR PURPOSE.

EXCUSIVE REMEDIES

THE REMEDIES PROVIDED HEREIN ARE THE CUSTOMER'S SOLE AND EXCUSIVE RENEDIES. EDR SHALL NOT BE LIABLE FOR ANY DIRECT, INDERECT, SPECIAL, INCIDENTAL, OR CONSEQUENTIAL DAMADGES, WHETHER BASED ON CONTRACT, TORT, OR ANY OTHER LEGAL THEORY.

ASSISTANCE

The above statements apply only to the standard product warranty. Warranty options, extended support contracts, product maintenance agreements and customer assistance agreements are also available. Contact nearest EDR Sales and Service office (or headquarter) for further information on EDR; full line of Support Programs.

SAFETY SUMMERY

The following general safety precautions must be observed dutring all phase of operation, services, and repair of this instrument. Failure to comply with these precautions or with specific warnings elsewhere in this manual violates safety standards of design.anufacture, and intended use of this instrument. EDR assumes mo liability for the customer's failure to comply with these requirements.

GENERAL

This product is a Safety Class 1 instrument (grounding provided via 3-prong power cable) The protective features of this product may be impaired if is is used in a manner not specified in the operation instruction.

ENVIRONMENTAL CONDITIONS

This instrument is intended for indoor use in an installation category II, polution degree 2 environment. It is designed to operate at a maximum relative humidity of 95%. Since the device is 100% solid-state made there is not much restriction to the altitudes and we use "up to 2000m" what is a comon in industry. Refer to the specifications tables for voltage requitrements and ambient temperature range.

BEFORE APPLYING POWER

Verify that the product is set to match the avalable line voltage and correct fuse is installed.

GROUND THE INSTRUMENT

This product is a Savety Class 1 instrument To minimiz shock hazard, the insrument mjust be connected to the AC power supply mains through a three-conducto power cable, with the third wire firmly connected to an electrical ground (safety ground) at the power outlet. Any interruption of the ground protective (grounding) conductor or disconnection of the protective earth termoinal will cause a potential shock hazard that could result in personal injury.

FUSES

Only fuses with the required rated current, voltage, and specified type (normal blow, time delay, etc.) should be used. Do not use repaired fuses or short circuited fuseholders. To do so could cause a shock or fire hazard.

DO NOT OPERATE IN AN EXPLOSIVE ATTMOSHPERE

Do not operate the instrument in the presence of flammable gases or fumes.

KEEP AWAY FROM LIVE CIRCUITS

Operating personnel must not remove instrument covers. Components replacement and internal adjustment must be made by qualified service personnel. Do not repalce components with power cable connected. Under certain conditions, dangerous voltage may exist even with thre power cable removed. To avoid injuries, always disconnetc power, discharge curcuitries and remove external voltage sources before touching components.

DO NOT SERVICE OR ADJUST ALONE

Do not attempt internal service or adjustment unles anohter person, capable of rendering first aid and resuscitation, is present.

DO NOT EXCEED RATINGS

This instrument may be equipped with a line filter to reduce electromagnetic interference and must be connected to a proper grounded recepticle to minimize electrical shock hazard. Operation at line voltage or frequency is excess of those stated on the data plate may cause leakage current in escess of 5.0 mA peak.

DO NOT SUBSTITUTE PARTS OR MODIFY INSTRUMENT

Because of the danger of introducing additional hazards, do not install substitue parts or perform any unauthorized modifications to the instrument. Return the instument to an EDR Sales and Service Office for service and repai to ensure that safity features are maintained.

Instruments which appeare damadged or defective shoul dbe made inoperative and secured against unintended operation until they can be reiapred by qualified service personnel

WARNING

PREVENTING A DAMADGE!
PREVENTING AN UNWANTED OUTPUT CONDITION!
External power sources must apply only after a mode of operation was set on the controller. The turning on must follow the following steps.

STEP 1: turn the switch ON of the AC power strip, the power LED on the front panel must light, after an AC/DC power supply started working
STEP 2: select the mode of operation, and
STEP 3: **apply external power sources.**

WARNING

It takes about 30 seconds for settling references voltages after 12VDC power applied. **During that time, there should be no tasks performed.**

The device has a large energy storage capacitors bank and it takes a time for charging it. The charging could take a long time. The timing is depending on your power source and a value of the current limiting resistor. The device is ready for tasks when voltage at the switch input terminal became equal to applied voltage

NOTE

The EN/PWM pushbutton, located on the control panel, **must be always depressed** (LED lights) **between tasks, changing a load, and adjusting external power sources.** Taking there is no signal applied via the BNC plug located in the same section of the control panel. The pushbutton performed dual functions and a signal applied via the BNC plug will control the output (major) switches.

Electronic Design & Research
www.vsholding.com

Technology for people's ideas

SHPSA-103A650/103D450

P/N EDR91006

Super-High Power Switching Apparatus

SPST switches installed rated at 380VAC (+/-650VDC) / 1000A & 650VDC/1000A. The system equipped with a HPSC-1/3 controller with an adjustable pulse generator once triggered would deliver a single 10mS pulse in a manual mode of operation

Universal DC/AC High-Power SPDT Switch

With EDR89002 controller

EDR91006 is a super-high power system designed for testing various components/devices. The high power rating and AC/DC capability makes it ideal tool for testing the high power UUT such as SMR, UPS, telecommunications equipment manufacturers, power suppliers, drivers, battery and other power sources. It operates from DC to 200 KHz and pulse width below 1.0 µS. The floor model offers manual and full remote control operations for easy integration into ATE systems. An internal build-in generator produces a pulse that allows the dynamic testing of many power sources delivering Bi-polar or Uno-polar voltages pulses.

P/N EDR91006, Key Features:

- **Power Rating: to .6MW (average), 3.2MW pulse**
- **N.C. Voltage: 650VDC (380VAC)**
- **N.C. Current: 1,000Arms and 3,200A surge**
- **Trd (turn on delay) = 650nS**
- **Tfd (turn-off delay) = 750nS**
- **Tr (rising slope) = 140nS**
- **Tf (falling slope) = 160nS**
- **Mode #1: Single Shot (manual)**
- **Mode #2: Single Shot (extern. trigger)**
- **A single pulse = 10mS +/-10%**
- **Mode #3: Push-pull or ½-bridge driver**
- **Mode #4: PWM modulation**
- **Mode #5: Floating output**
- **Built-in 450V/.08F high-speed, high-current capacitors array on N.O. side,**
- **TTL/CMOS compatible inputs**
- **Case: 23"W x 19.6"H x 23.5"L**
- **Weight: 420lb (200Kg)**
- **A glass front door with a lock**

Applications:

- **Plasma and Electrostatic Paint**
- **Arc-Drilling**
- **Electrical Discharge Machine (EDM)**
- **Switch for Automatic Test Equipment**
- **Ultra-High energy pulse formation**
- **Flash-lamp supply for pumping solid-state laser**
- **Plasma-aerodynamic experiments**
- **Test high power electronics**
- **HED plasma physics**
- **Electrofusion and Electroporation**
- **Test power supplies, components, etc.**
- **Applications include those in material science, medical, physics and chemistry**
- **Electromagnetic pulse**
- **Quality and performance tests**

Electronic Design & Research Inc. ** 7331 Intermodal Dr. ** Louisville ** KY 40258
Tel: 502-933-8660; e-mail: order@vsholding.com

Family of Opt-Isolated Superfast, Super-High Power Switching Apparatuses

EDR Inc. has expended the family of Super-High Power Switching Apparatus (SHPSA) by adding SHPSA-103D650 rated at 1,000-Amps & 650V. Newest addition delivers megawatts of energy in a fraction of second and hundredths kilowatts continuously. Utilizing several SPST switches the SHPSA-103A650/103D450 controls AC and DC voltages for a wide range of educational, scientific research, industrial, and defense related applications. Initially, the SHPSA devised for meeting a growing demand for testing components that used for manufacturing electrical cars. In a short time, applications expended for testing power supplies providing a short under or overvoltage surges, military communication gears, and many others sensitive to power fluctuation electronic equipment.

The SHPSA-xx consists of several SPST switches, a capacitor bank or V-battery, and a control board (SHPSC-x/x). The control board designed for making SPST switches acting as a SPDT&N (ON-OFF-ON) switch or a high-power, high-speed push-pull, a ½-bridge driver. It can also be describe as a single-pole changeover (SPCO), or a single pole, triple throw (*SPTT)* switch having a third condition when the common terminal can stay in the neutral (floating) state indefinitely. The neutral state is an extremely useful property of the SHPSA-xx that allows replacing a load and set desirable applied voltages. It functions as a break-before-make action switch with a minimum "dead time" for preventing a shoot-through current that precisely controlled at about 90nS. Most remarkable, SHPSA-xx delivers nearly perfect rectangular shape pulses with rising and falling slopes better than 140nS with D9Gxx type switches and 60nS with D9Fxx type switches, and 12ns rising slope with a D9Sxx SPST switches. The superfast high-current capacitors array (V-battery) helps maintaining rising slope speed regardless an external power source's quality.

The SHPSA-xx is a perfect tool for generating either, unipolar or bipolar pulses shown on FIG #6. Nothing special is required just having a proper power supplies that hooked up correctly.

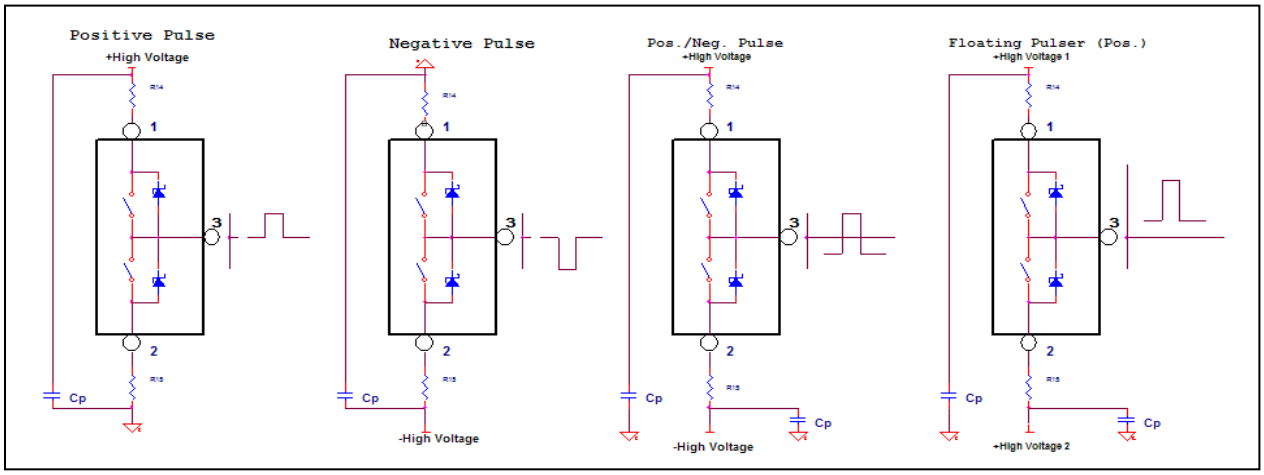

FIG #20

A SHPSA-xx generates proper pulses with aids of two (2) external power sources. As it shown on the FIG #20, both power supplies are connecting to power input terminals. Power supplies should set at required voltages and connected to the input power terminals in such way, the final waveform matches required polarity.

Table #1, Short list of available devices for high-power switching applications

EDR91001/1	SHPSA-402A250	250V/400A Super-High Power Apparatus with 100V/.5F Virtual battery
EDR91006/1	SHPSA-103A650	650V/1000A Super-High Power Apparatus with 450V/.01F Virtual Battery
EDR89001/3	SHP-SPDT/12	Super-High Power SPDT, assembled in rock 19" consists of D9G400A200 and D9G400D200 SPST switches
EDR89001/C/3	SHP-SPDT/C/12	Super-High Power SPDT, assembled in rock 19" consists of two D9G400A200
EDR87xxx/c/x	SFDCA-v/xx/c	Assembly of high-speed, high-current capacitors, Vmax _____, Cf_____
EDR89013/3	D9G103D650/12	HP-SPST switch rated at 1,000A & 650VDC
EDR89014/3	D9G502A650/12	HP-SPST switch rated at 500A & 650VDC (380VAC)
EDR87xxx/S	SFDCA-v/xx/S	Suffix "S" is for a silver-plated copper bus bar. It is required for a higher speed of discharge current (for a rising slope of 250nS and faster.)
EDR87xxx	Protector	Many types of the protector available, please contact us for a proper p/n
EDR89002/1/3	HPSC-1/12	A controller for generating a single pulse
EDR89002/3/3	HPSC-3/12	A controller for generating three consecutive pulses
EDR87100	Remote push-button	A push-button mounted on one side of 2'-long cable ended by a BNC connector
EDR87102	AC/DC Supply	External, 12VDC/1.5A for the maximum up to 200KHz modulation
EDR87103/1	EDR91001's Manual	Printed addition of the user manual, available free from www.vsholding.com
EDR87103/6	EDR91006's Manual	Printed addition of the user manual, available free from www.vsholding.com

EDR84126 (D9G500A200)

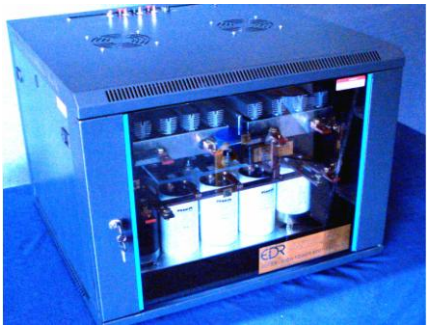

EDR91001 (SHPSA-402A250)

EDR89001 (SHP-SPDT/12)

On the left side shown three super-high power switches, as a 500VDC (350VAC) / 100 Amp SPST switch, a 400VDC (280VAC) / 250 Amp SHPSA, and below is a super-high power SPDT switch made by EDR Inc.

Beside listed super-high power switches, we can assemble Switching Apparatus for whatever current and voltage would required. While ordering one of available device, a special attention paid for defining (specifying) SPST switches, the protection and the SFDCA-xx. Switches and protections are offering for DC and AC/DC applications. In some cases, Super-High Power Apparatus assembled with matching ratings SPST switches, and assembled with SPST switches rated with different voltages/currents. Obviously, a sub-component made for a DC only application costs less.

A cost of the SFDCA-xx could be rather high and that depends on rated voltage, the total capacitive value, a discharging current and speed, and type of capacitors used. In some cases especially for a low voltage not exceeded 250V and high rated current, a combination of two types of capacitors were install for achieving a fast rising slope and a pulse's flattop. A high-discharging current metal-film type capacitor is required for a fast slop, and high discharging. High-speed electrolyte capacitors are useful

Brief description of input/output terminals and control of the SHPSA

Front side

The control panel and output terminals installed on the front of a 19” rock enclosure. The control performs several functions and most important synchronizing two SPST switches work as a single SPDT configuration. There are three sections: (1) the trigger having BNC connector for an external trigger signal and a remote push-button, and a momentarily push-button switch. (2) The EXT/INTER having a toggle push-button and BNC connector for control, and (3) The EN/PWM has the same a toggle pushbutton and BNC. In addition, a power plugs, a power light indicator, a potentiometer for adjusting the pulse-width, and the output BNC connector.

Three heavy duty tinned 4/0 lugs made of high copper alloy for joining a wide range of cables.

A push-button for triggering the V-battery discharging cycle and LED installed on the left side of control panel.

Backside

The back panel provides an easy and safe access to three input power terminals. A VDC powers (up to 450V) can apply to the +V1/V-battery terminal. DC or AC voltage can be apply to the +/-V2 terminal. A power from the +V1 terminal directly applies to the V-battery (capacitor bank) and one of SPST switch terminal.

At first, a power from an external source must apply slowly from 0V to the required +V maximum. A voltage to the terminal +/- V2 must applied after the +V set. Any voltage of up to 600VDC (420VAC) can apply to +/- V2 terminal and must be least 10% below of the +V1 voltage.

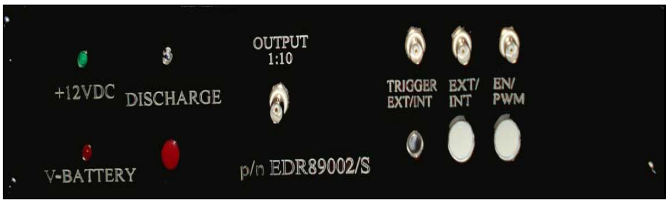

The controller

The control installed on the front of enclosure. It performs several functions and most important synchronizing two SPST switches to work as a single SPDT. There are four sections: (1) the trigger having BNC connector for an external trigger signal and a remote push-button, and a momentarily push-button switch. (2) The EXT/INTER having a toggle push-button and BNC connector for control, and (3) The EN/PWM has the same a toggle pushbutton and BNC. In addition, a power plugs, a power light indicator, a potentiometer for adjusting the pulse-width, and the output BNC connector. (4) Discharge control

Top

Two high-power discharging resistors mounted on the top of cabinet. Normally they should be of a room temperature and the temperature could go up while discharging the V-battery. That is all depending at what voltage the V-battery changed.

A row of eight (8) LEDs mounted on the top indicates if there is the V-battery hold a voltage. They automatically turn off when that voltage dropped below 8.0 volt.

Controller P/N EDR89002/1/3

There are several controllers are available for SHPSA. Having the abilities to control high-power SPST switches, they are mainly differing in the way a single or multiple pulses generated.

NOTE: The EDR89002/S controller with a built-in pulsar is useful for generating a single pulse of a predefined duration for simulating a transient voltage. The internal pulsar triggered manually or via BNC connector. Presence of the nominal voltage controlled by applying 0V timely synchronized with the pulse (nominal) into the EN/PWM input.

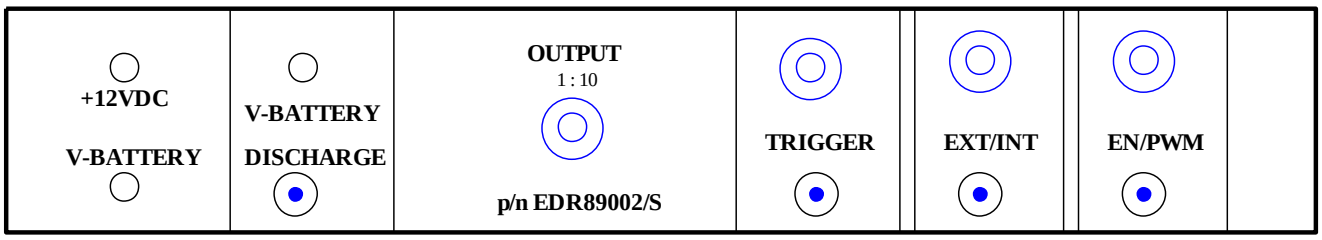

Possible waveforms generated by the controller (P/N EDR89002/S). The duration of pulse is preset by the factory to 10ms, and it can be adjusted to any required. Voltages V1 and V2 adjusted by two external power supplies and can be any from -/+500V (350VAC) for a nominal voltage (V2) and to any from 0V to 500V for a transient (V1) voltage.

NOTE: P/N SHPSA-102A650&102D450 can operate with a wide range of voltage/current and the following must be observe and maintain **– the V1 must be larger than the V2 at least for 10V.**

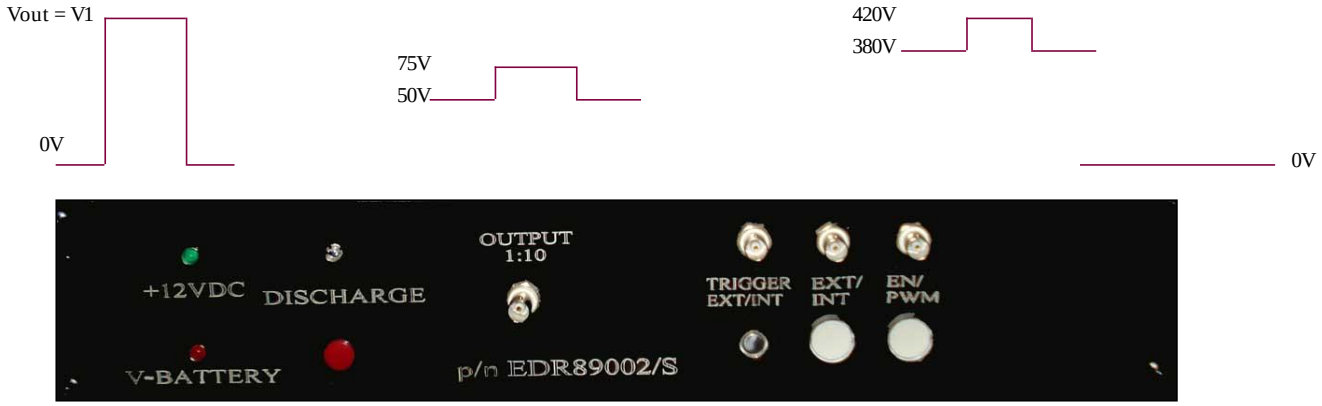

FIG #21, the panel of controller (p/n EDR89002) and its modes of operation

The control panel (above) is a part of controller (p/n EDR89002) included in each SHPSA-xx/vv. The controller can be purchase separately for making any two EDR-made SPST relays/switches function as a single SPDT (push-pull driver) relay/switch. More precisely, the controller creates a *SPCO/SPTT* switch with a stable off position in the center. It is also utilizable for controlling an H-Bridger driver (four SPST switches can be used). P/N EDR89002 designed to operate up to several megahertz. It is obvious that the highest switching frequency of the SPDT or H-driver will depend on the performance and specifications of chosen SPST switches.

The controller required an external +12VDC /1.0 Amp power supply. Practically, the power supply is also supplying both switches.

The controller installed on the front of enclosure. It generates control signals for SPST switches to work in a brake-before-make fashion for preventing the momentary enabling (turn-ON) both

switches at the same time thus eliminating a chance for a current rush. Control signals generated about 90ns a part or called it a “dead” time. Choosing duration of the dead time depends on several facts and mostly on durations of rising and falling slopes of SPST switches. Since super-fast switches have a rising slope of 50-nS, the dead time was set to 90-nS but it can be of any duration. In any case, the duration of dead time must be longer than the combined duration of rising and falling slopes for selected SPST switches to prevent a current from flowing through both switches at the same time.

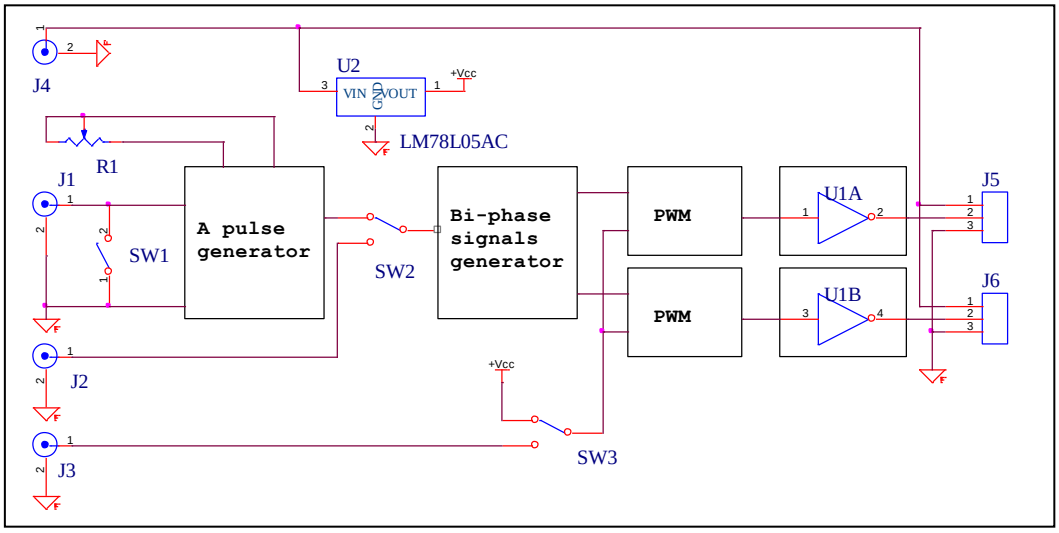

FIG #22, Simplified block-diagram of the controller, P/N EDR89002

The controller performs several functions and, most importantly, synchronizes two SPST switches to work as a single SPDT switch. Here are modes of operation.

1. SINGLE PULSE MODE (<u>none of the EXT/INT and EN/PWM pushbutton switches pressed</u>) – A single preset-width pulse can be triggered by manually pressing the TRIG pushbutton switch or by applying a trigger signal via the BNC connector. The internal one-short trigger generates a single pulse once triggered. Pulse duration from a few microseconds to an hour can be set; please specify.
2. EXTERNAL PULSE MODE (<u>only the EXT/INT pushbutton switch pressed</u>) – The EXT/INT section has a toggle switch with a built-in LED indicator and the BNC connector. A pulse of any duration can applies to the BNC connector located on the EXT/INT section when the EXT/INT pushbutton pressed. There is no limit on a long side, while the shortest pulse limited by the type of installed SPST switches. D9Sxx/xx type switches allow a pulse with duration as short as 100nS; the “D9F” family is 500nS and “D9G” is about 900ns. The pushbutton switch is a toggle type having two stable states: push ON and push OFF. The pushbutton has a built-in LED and it will light when the button is in the “ON” state.
3. DISABLE MODE (EN/PWM pushbutton pressed and no signal applied via the BNC plug) – The EN/PWM section has also a toggle pushbutton with a built-in LED indicator switch and BNC connector. If no signal applies to the BNC connector and the push-button pressed (LED lights), both SPST switches will turn OFF and the main power output of SHPSA-xxx will stay unconnected indefinitely.
4. PWM MODE – (the EN/PWM push button pressed and a signal applied via the BNC plug) – one of the switches, either the N.O. or N.C., will be modulated by the applied signal. Selection of the N.C. or N.O. side achieved by applying “high” or “low” via the BNC (ext/in) plug.

5. Logic “0” when no signal applied via the BNC plug and the N.O. switch is achieved by pressing the EXT/IN pushbutton switch; logic “1” or +5V enables the N.C. switch.
6. The BNC plug (OUT to OSC) is for recording a signal from a load.

	INPUTS						OUTPUTS	
TRIGGER	**ENT/EXT**			**EN/PWM**			**N.O.**	**N.C.**
	P-B		**BNC**	**P-B**		**BNC**		
	OFF	**ON**		**OFF**	**ON**			
H	**Y**	**-**	**x**	**Y**	**-**	**x**	**L**	**H**
L	**Y**	**-**	**x**	**Y**	**-**	**x**	**Pulse**	**L**
X	**-**	**Y**	**L**	**Y**	**-**	**x**	**H**	**L**
X	**-**	**Y**	**H**	**Y**	**-**	**X**	**L**	**H**
X	**Y**	**-**	**X**	**-**	**Y**	**L**	**OFF**	**OFF**
X	**Y**	**-**	**X**	**-**	**Y**	**L**	**OFF**	**OFF**
H	**Y**	**-**	**X**	**-**	**Y**	**H**	**L**	**H**
L	**Y**	**-**	**X**	**-**	**Y**	**H**	**Pulse**	**L**
X	**-**	**Y**	**L**	**-**	**Y**	**H**	**H**	**L**
X	**-**	**Y**	**H**	**-**	**Y**	**H**	**L**	**H**

Table #2
The EDR89002 operations truth table (logic)

Superfast Capacitors Discharging Array (SCDA-01)

(The information borrowed from the EDR87103/1's manual)

Creating a high-power pulse is a challenging task. That is especially true when a waveform of the pulse must be as close as possible resembling a rectangular shape waveform, otherwise with sharp rising and falling slopes (no scaling) and flat-topped. There are two devices are essential for generating a rectangle-like waveform. They are, a switching device that must have a push-pull class "C" or ½-bridge driver output (SPDT switch) and a fast discharging power source that capable of releasing its energy promptly. If the system is over-damping then the waveform may never actually reach the theoretical high and low levels, and if the system is under-damped, it will oscillate about the high and low levels before settling down. In these cases, the rise and fall times measured between specified intermediate levels, such as 5% and 95%, or 10% and 90%.

As already mentioned, an ideal square wave pulse has instantaneous transitions between the high and low levels. In practice, this is never achievable because of physical limitations of components that generate the waveform. The times taken for the signal to rise from the low level to the high level and back again called the rise time and the fall time respectively. That means the switching device must be capable of delivering fast a required energy and dissipating of a remaining in a load at the end of pulse as fast. A device having two SPST switches is an example of the best of push-pull amplifiers that is how the SHPSA-xx/vv built.

The other obstacle in creating a rectangular pulse is a power source ability of supplying required energy fast. A common power sources, a battery and electronic power supplies are working well while delivering steady energy, ill equipped for discharging a large amount of energy in a fraction of microseconds. As figure below shown, it takes a time for an applied voltage to reach its maximum, when energy is coming from an external power supply.

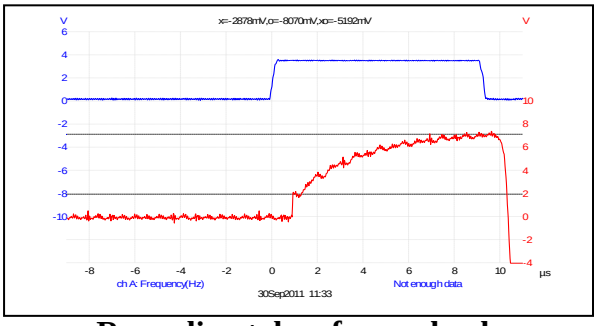

Recording taken from a load

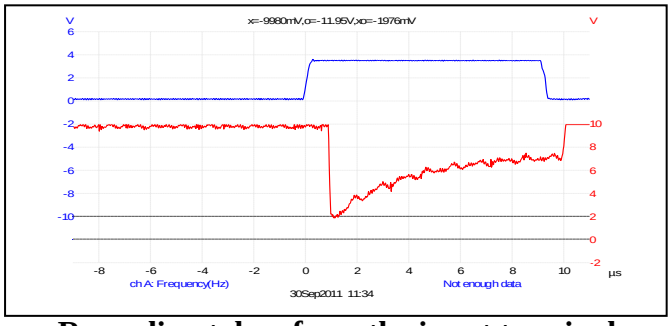

Recording taken from the input terminal

On the both figures, the top recording is a control signal shown for a reference. A power source was a switch-mode power supply, model JP500/12S-7U made by Unipower Cor. The power supply connected to the switch input terminal via #1/0 Gauge cable. There two factors contributed to voltage damping: an inductance of the cable and inability of electrolyte capacitors (power supply) of discharging fast energy (current).

The SHPSA-xx/vv employs a unique solution for elevating that problem. A number of high-speed, high-current capacitors connected in parallel via a copper bus bar. The SCDA-05 helped greatly to improve a pulse shape. On the right, a recording was taking form a load when a bank of capacitors connected to the switch input terminal.

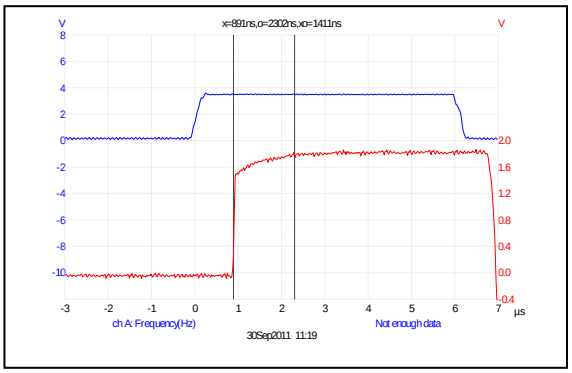

The recording shows drastic improvements. An output pulse appeared to be much closer to a rectangular waveform.

Application NOTE #2: A technique for obtaining required shapes of rising/falling slopes

While designing the SHPSA-xx/vv we took good care in avoiding unpleasant voltage spikes and reflective waves or ringing. Our switches can deliver a large amount of current extremely fast and clean. Switches were turning on and off during 15nS that contributed to an abrupt disconnection of a load from the power source leaves a large amount of energy in it that is violently searching for a discharging path. Resulting are high transient voltage surges and reflective waves (appeared like an oscillation). A lowering turning on and off speeds might be a solution, but practically it would be a bad decision. A switch designing to commutate 400A or more current will generate a large amount of heat if turning on/off times are significant lower. We had no choice but install a high-speed switch when a high current rating was required.

The high rate of change in voltage with respect to time or dV/dt causes a large voltage spick that developed at even short cable lengths. Voltage peaks might become as large as twenty times of the applied voltage. A switch capable of withstanding a much larger current than rated at, or about 900%, but a 15% voltage surge, above the maximum rated voltage, is capable of damaging it. Unfortunately, we have no practical definite recommendation how your load and connective cables would behave under a super-fast wave of pumped energy. We strongly recommend running several test with a low voltage (about several volts) a prior applying a fill power.

Fortunately, the SHPSA-xx/vv design allows solving that obstacle rather simple and insures the switch's long trouble free operation. There is a rather simple way existed for solving a voltage surge's problem in a SPDT switch by installing **decelerator networks (L1/D1 and L2/D2) in power lines.**

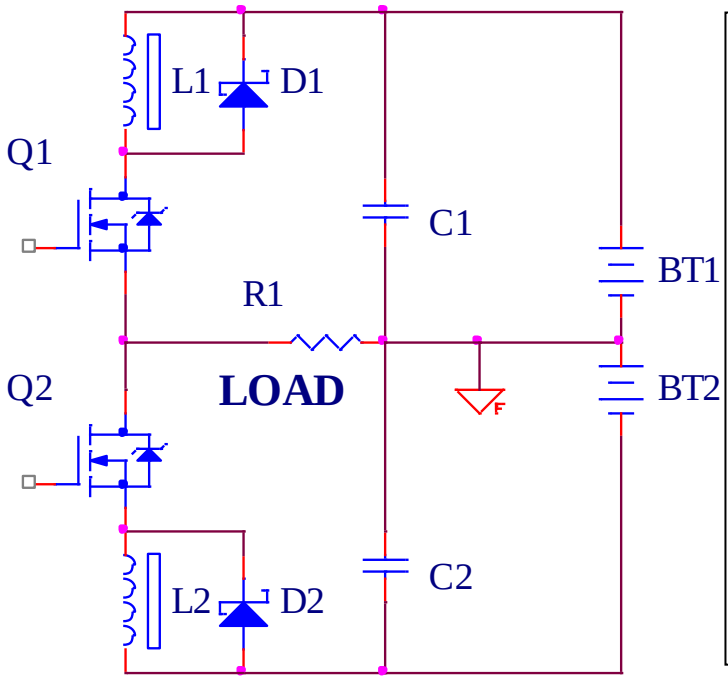

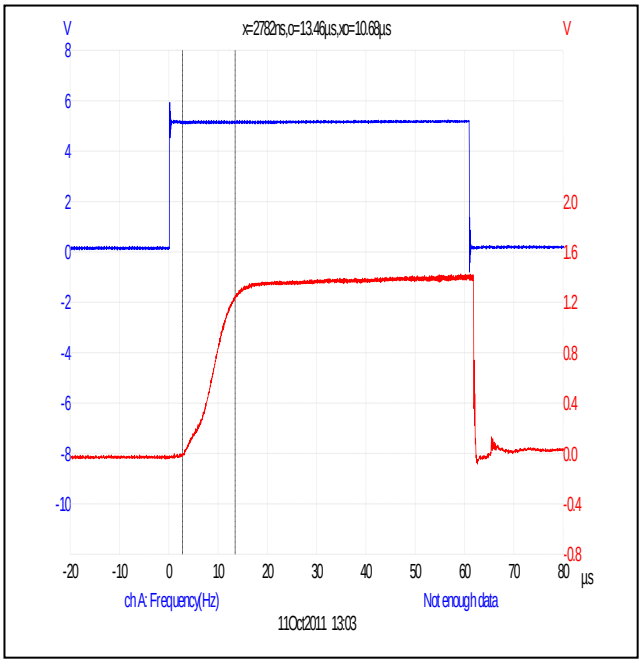

Simplified diagram of the SHPSA-xx/vv output section. The N.O. and N.C. switches respectfully presented by transistors Q1 and Q2.

Two jumpers incorporated in power lines, Jumper #4 installed in between the N.C. switch and Vcc2, and Jumper #1 installed between the N.O. switch and the Vcc1. Jumpers can be easily removed and chocks (L1 and L2) with diodes (D1 and D2), as it shown on the drawing below, can be installed instead. Low value resistors (about 1.0 Ohm) can substitute diodes. A resistor or diode dumps energy in the chock thus preventing an oscillation. Unfortunately, we cannot give you a simple equation for calculating values of the chock and resistor. They values are very much depended on a load and connective cables.

We do not have formulas for calculating values of inductors and offer an empirical instruction how to find the best value for the inductor for obtaining desired slopes. At first, we ran 50uS pulses, at 200A with a duty cycle of .01%. Two circular ring-shaped ferrites placed on jumper #1, and one ferrite was on the jumper #4. Two ferrites are visible on the picture, on the right below. As it seen, the pulse contained not many artifacts.

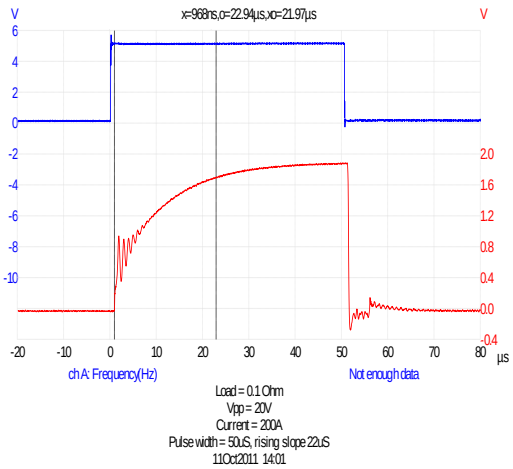

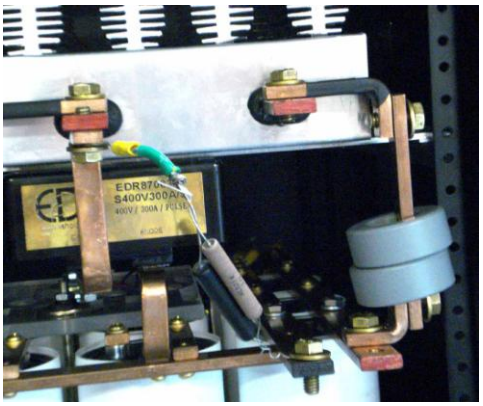

A 200A current is quite not ordinary event. The **SHPSA-xx/vv** had no problem handling that current, but the voltage dumped on the capacitor bank (SCDA-05), which is about .5F. A capacitor bank of several farads will be able to provide much more energy and a voltage dumping would be less significant. The following several tests run with a lesser current for demonstrating effects of the decelerator effect of an inductor on a rising slope.

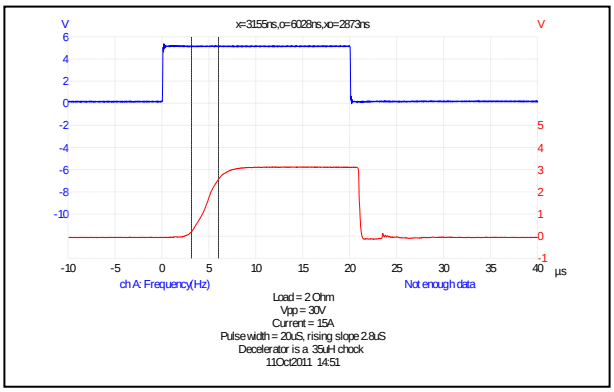

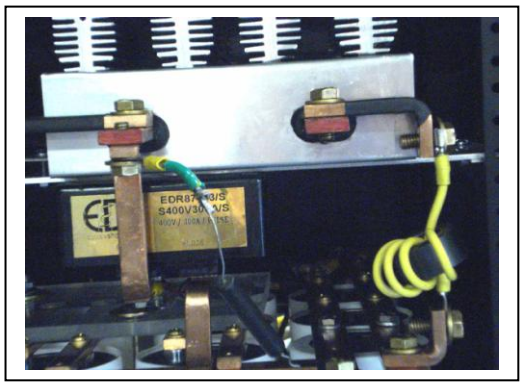

A 35-µH inductor made on a toroid with three turns of 6.0 AWG copper wires, as it shown on the above picture a pulse on a 2-Ohm load looks almost perfect. The rising slope was 2.8-µS. The array of capacitors was able to provide 15A and no a voltage dumping is noticeable.

One more recording was taking with an 18-µH inductor. As it was expected, it shortened the rising slope. The rising slope became of only 1.5-µS.

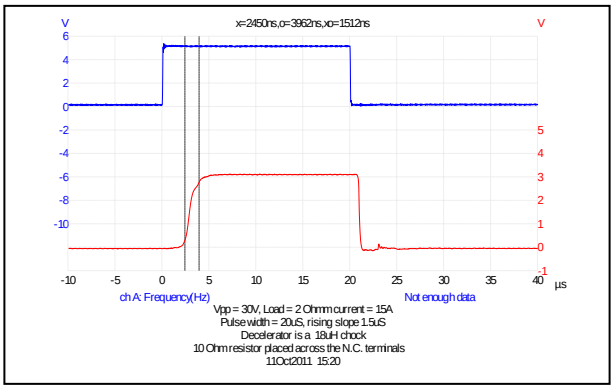

The switch's rising slope is about 15-nS. Hence, with help of the decelerator network the rising slope could be set from 15-nS to many milliseconds or longer. Your, particular decelerator network could include a resistor connected either in parallel to the inductor or in serious. On the schematic above, we included diodes D1 and D2 installed parallel to inductors, L1 and L2. In some applications, they could help in obtaining a shape of the pulse that will satisfy your strict requirements.

NOTE

A decelerator network provides one additional and could be the most important benefice. In short, it greatly extends a switch life span by not letting creating transient voltage surges and uncontrollable burst of oscillation.

It is more challenging to create a "pretty" looking pulse when both SPST switches are of DC/AC family. Once energy pumped in, it will re-cycle several times in an oscilloscope's cable creating reflective waves. A simple solution is placing a resistor across terminals for discharging that energy faster.

Application Connections

Wiring Considerations

WARNING	FIRE HAZARD: To satisfy safety requirements, load wires must be heavy enough not to overheat While carrying the short-circuit output current of the device connected to the SHPSA. Refer to Table below for the ampere capacity of various standard wire sizes.

Connections to external power sources made to a pair of binding posts on the rear panel. (Input connections made to the optional front panel binding posts) A major consideration in making input connections is the wire size. The minimum wire size required to prevent overheating may not be large enough to maintain good regulation. It is recommending stranded, copper wires be used. The wires should be large enough to limit the voltage drop to no more than 0.5 V per lead. Table 2 gives the maximum load lead length to limit the voltage drop to the specified limit.

Ampacities of insulated conductors

AWG	Copper
8	50
6	65
4	85
3	100
2	115
1	130
1/0	150
2/0	175
3/0	200
4/0	230
250 kcmil	255
300	285
350	310
A pulsing current	**2% duty cycle at least x4 times**

Operation Overview

Protective Features

All devices manufactured by Electronic Design & Research Inc., made to withstand higher and in some case, much higher current than they rated.

CAUTION	To protect a SHPSA from possible damage, voltages from external power supplies must not exceed the maximum input voltages ratings.

Overtemperature

The SHPSA assembled with several SPST switches rated as DC and some as DC/AC voltages. It can be used to test varies power supplies, devices, and any other equipment on their susceptibility to an applied power. It can be use for test chokes, inductors, and transformers. The SHPSA is perfect as a pulsar in high-speed Capacitive Discharge Welding Systems. It is capable of providing short-duration weld pulses enabling low energy welding and repeatable precise results with an ultra-fast rise times for high throughput weld cycles over a broad range of applications. It will find use in fields of particle accelerators, ultra-strong magnetic fields generation, fusion research, providing a power to high power pulsed lasers, and generating electromagnetic pulses.

The SHPSA having a versatile design allows by inserting various a current controlling devices such as a resistor or a high-current chock creating a pulse with various duration of slop that makes it an invaluable tool in fields of research and education. It is capable of delivering a megawatt of power in a microsecond. Using already developed and tested technologies, a number of various systems can be assembled and we are welcome your inquiry.

Installation

Inspection

When you receive your SHPSA-xx/vv, inspect it for any obvious damage that may have occurred during shipment. If there is damage, notify the carrier immediately and notify the nearest EDR Sales Office. Warranty information is available on the inside from cover of this manual or can be downloading from our website www.vsholding.com.

Save the shipping cartons and packing materials in case the instrument must be return to EDR in the future. If you are returning the instrument for service, attach a tag with the information identifying the owner and model number. Additionally, please include a brief description of the problem. In additional to the manual, check that the following item(s) have received with your SHPSA-xx/vv.

Location and Cooling

The SHPSA-xx/vv designed for an industrial environment and required a minimum knowledge and experience to operate. Protective futures help to withstand some abuses and insure along maintains free operation. There is no additional air filtration required if the instrument installed in a laboratory (office room) or any other dust-free environment (room).

The instrument operates without losing its performance within temperature range from -30 ^{o}C to 45 ^{o}C. At a higher environmental temperature from 40 ^{o}C to 85 ^{o}C maximum ratings are lower. The SHPSA-xx/vv must be in a location that allows sufficient space at the top of the instrument for adequate air circulation. Please order a fans assembly if an environmental temperature exceeds 45 ^{o}C.

Turn-On Checkout

The simplified turn-on checkout procedure discussed in this section verified that the SHPSA-xx/vv is operating correctly. Before connecting the power cord and turning on the SHPSA-xx/vv, check that the line voltage is set/match correctly and that the current resistor turned counterclockwise, until the end (zero) and the switch (external/internal) set to the internal.

Connect the Power Cord

Your instrument supplied with a power cord for a consumer-type power outlet. Connect the power cord into a power outlet. A SHPSA requires lesser than 15W for operation.

Operation

Control and operation

The SHPSA-xx/vv designed for an industrial environment and required a minimum knowledge and experience to operate. Protective futures help to withstand some abuses and insure along maintains free operation. There is no additional air filtration required if the instrument installed in a laboratory (office room) or any other dust-free environment (room). Please order a fans assembly if an environmental temperature exceeds 45 C

Operation and control of the SHPSA-xx/vv is rather simple. Control panel equipped with the BNC connector for remote control and push buttons for triggering manually.

It recommended a duty cycle of 2% or lowering while generating high-current pulses especially if a pulsing current is equal or more than 1/3 of the nominal rating. For a higher pulsing current, the duty cycle must be longer otherwise charging power sources can be overloaded.

Since all initial turn-on completed the instrument is ready for testing, connect a DUT to log terminals via the heaviest wires that meats maximum current requirements. Selection of a proper AWG of wires as rule of thumb deepened on a testing current, wires length and applied voltage than connected wires should be heavier.

Availability and ordering procedure

A Super-High Power Switching Apparatus (SHPSA-xx) is available but it is non-stackable item. Assembling a V-battery takes a substantial time due to required capacitors are not freely available and OEM companies need 6 to 12 weeks for making them. The delivery time is very and greatly depends on your order's specifics. Either a part number (P/N EDRxxxxx) or abbreviated name (SHPSA-xxx) use for ordering. All inquiries and your purchase order please email to order@vsholdign.com.

Repair and exchange services

Electronic Design & Research Inc. provides repair and maintenance services for any industrial electronic items made by any OEM company including its own equipment.

If you suspect that your SHPSA has malfunctioned, please reach us via email info@vsholding.com (the best option) or by phone (1-502-933-8660) for an RMA Number.

A SHPSA is not easy to damage. A prior of calling us and shipping the device for service, it is recommending to run a test with the "dummy" load and check all power sources. Be sure they are good and functioning.

Ship prepaid malfunctioned device: Electronic Design & Research, Inc., ATTN: Service Deportment, 7331 Intermodal Drive, Louisville KY 40258, USA. Write the RMA # we provided you on the top of box with an easy to read marker. Our building has a loading/unloading dock.

WARNING

SHPSA is a semiconductor device. The output driver uses MOSFETs that are better tolerate excessive current rather than a voltage over the rated levels. Careful attentions pay to applied voltages!

NOTE

SHPSA still could be damage even when proper voltages are applied. That might happen during switching of an inductive load. An inductive load is prone to generating a transient voltage surge that could be 4–40 times higher than the applied voltage. Please remember that connecting cables are part of the load. A long, curly cable could provide a significant inductance and cause a voltage surge, even a load, as if it were a capacitor. Connecting cables must be as short as possible and as straight as possible.

Looking forward statement

EDR's SHPSA-XXX is a cost-effective, solid-state switching system with endless possibilities and applications. An especially significant fact to consider is its ability to deliver kilowatts of power of any polarity onto a load almost instantly. The simplicity of interfacing with smart automatic test equipment (ATE) gives engineers tools for incorporating it in designing tomorrow's equipment. The SHPSA-xx will find use in modern laboratories and help conduct modern scientific experiments, will serve a factory as a power distribution device, or even a quality control lab assisting in setting standards and testing final products.

EDR's high-speed relay/switches are compatible with many direct driving integrated devices. Input-output galvanic isolation has made them important and valuable components in new designs. The company is the front-runner in developing solid-state relays, switches, ½ and H- bridge drivers, brakes, security modules, etc. Since 1998, we have consistently offered superior devices to a growing customer base. From low-cost D1L-type relays to a sophisticated iVS092011P200A8/24/NN intelligent relay/breaker that installed in power distribution of super-servers on submarines, EDR offers power devices to meet your forward-looking project requirements.